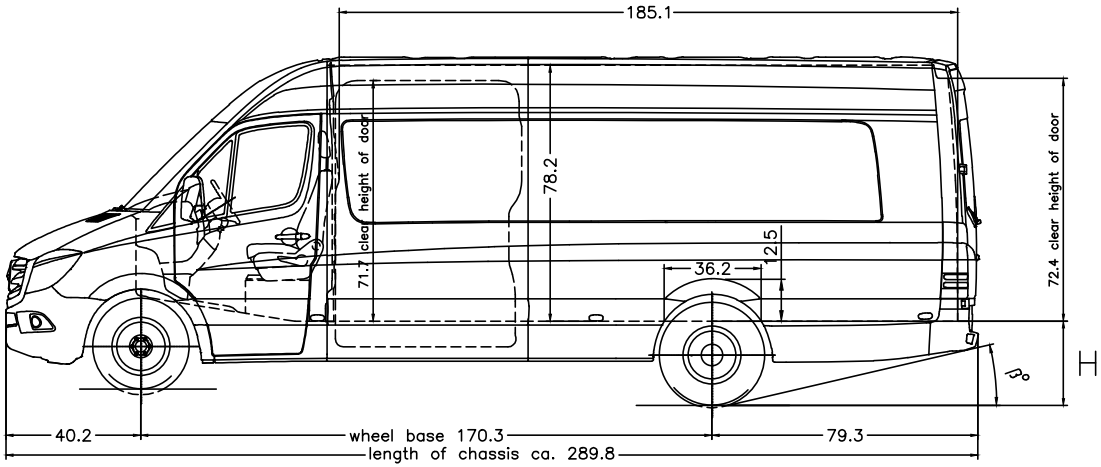

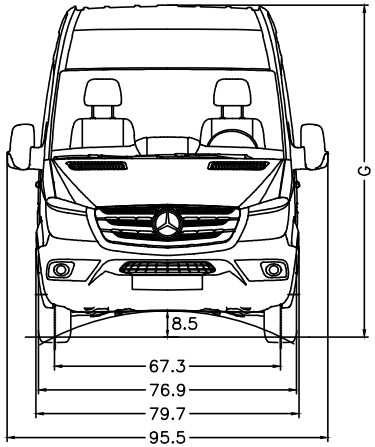

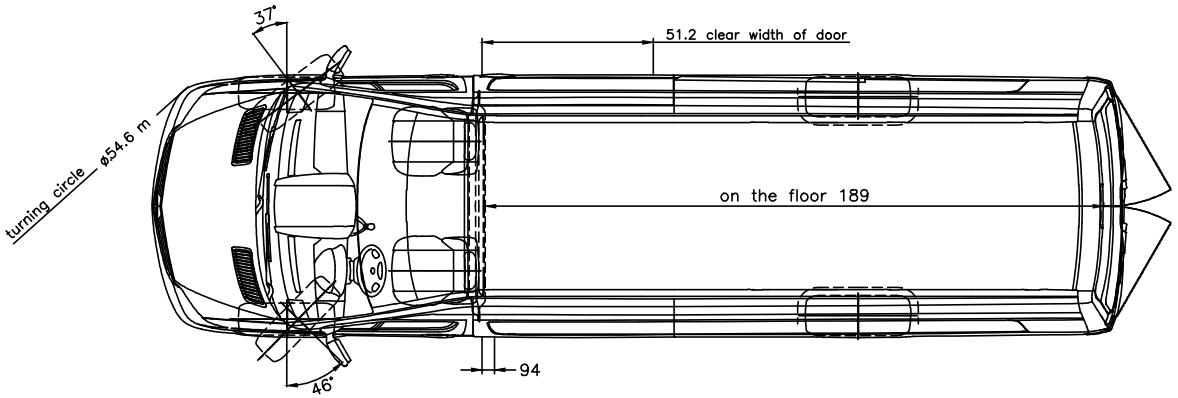

Hecktueroeffnung 90°/180°
(rear door opening)
Sonderausruestung 260°
(optional equipment)

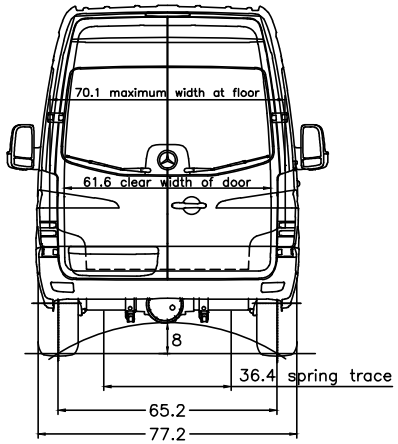

DS0 Full-length partition
IR7 Wheelbase 4325 mm, overhang 2015 mm
MG5 Engine OM 642 DE 30 LA 140 kW (190 hp) 3800 rpm
NH7 Engine, low-emission EPA 16/CARB
RH9 Super-single tyres, 285/65 R16 C
SO4 Adjustable co-drivers seat
T16 Sliding door right
XA4 Weight variant 4,600 kg
XM0 Facelift
ZM0 Panel van

DO3 High roof
DO3 High roof

Important notes:
- It is the responsibility of the bodybuilder to ensure that the vehicle is suitable for homologation after the body has been mounted.
- The drawing is simplified to some extent and is not legally binding. For more details and further explanations please see the MBAS-Web User Guide in the bodybuilder portal.
- Please check whether the drawing specification complies with the chassis configuration of your order.
- Optional equipment codes not listed here, KW-codes and changes resulting from feasibility checks (BBA) are not included in the drawing.

vehicle type :	loading space =	547 cu.ft.	H unladen	G unladen	α°	β°	γ°
906.657-13	86.1 sq.ft.	25.5	27	111	18	15	14

tyres	gross vehicle weight	GVW (t)	FA (t)	RA (t)
205/75R16 285/65R16		2087	839	

All dimensions refer to the standard version. Measurements of laden vehicle.

Our instructions for the manufacture of superstructures must be observed, when planning to fit bodies of other than Mercedes-Benz manufacture.

Subject to change.

ZOS	Date	Order no.	ZOS	Date	Order no.
				23.04.15	

We reserve all rights for this drawing.The drawing may neither be copied nor passed on to any third person.

Dimensions are subject to a tolerance of up to +/- 3%

drawn by	Dr.Müller	Format	A4
checked by	Dr.Müller		
released by	Dr.Müller		

Abtlg.(dept.)TE/SOD
70546 Stuttgart

Mercedes-Benz

Cargo Van/Crew Van

3500/4x2/170.3

HVA 9061000282